QRM A PTW COMPANY

QRM-MicroCT-Wire

Micro-CT Wire Phantom

The Micro-CT Wire Phantom is a perfect tool to assess in-plane spatial resolution of any Micro-CT system. Different diameters of wire and materials are available.

The Micro-CT Wire Phantom is based on a cylinder containing two wires in air or in solid material aligned parallel to the phantom axis of rotation. One of the wires is slightly positioned off center, the second one away from the center in order to allow estimating image quality in the periphery.
Point Spread Function (PSF) and Modulation Transfer Function (MTF) can so easily be investigated.
Different wire diameters are available as well as different materials and positions of the wires inside the phantom.
Please specify the material the wires should placed in (air or solid plastics). In both cases the contrast will be high enough for evaluation.

Micro-CT Wire Phantom (D32/D20 wires in air)

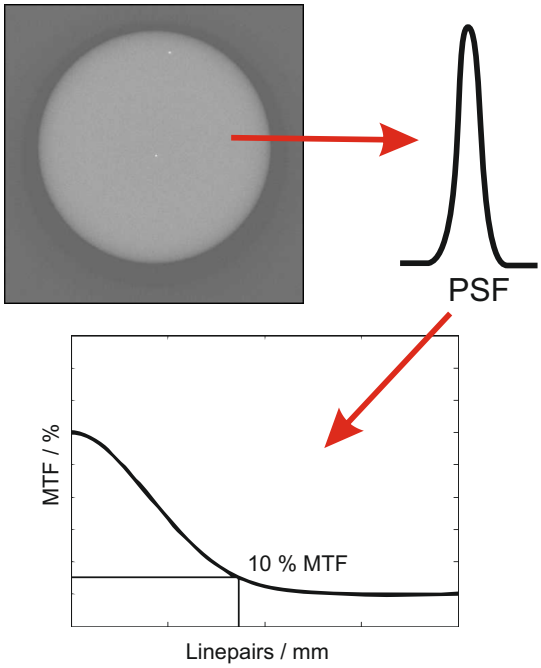

Example for evaluating MTF

Specifications

Material of wire .....typically tungsten
Diameter ..... 20 or 32 mm
Length inner/total..... 40 / 58 mm
Weight ..... 7.5 g (air)
35 g (resin)
Diameters of wires ..... 3 , 10 or 25 µm

Other wire matererials and phantom *dimensions upon request!*

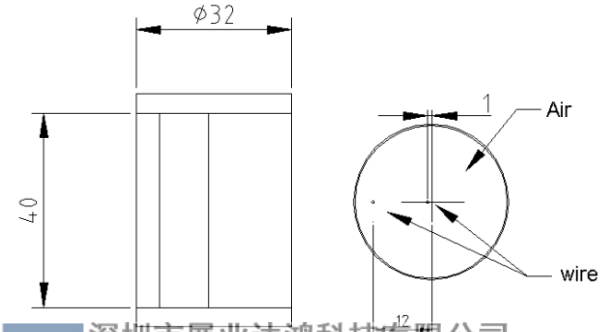

Schematic drawing and measures

References

[1] Kalender, W., Durkee, B., Langner, O., Stepina, E., Karolczak, M.: Comparative Evaluation: Acceptance Testing and Constancy Testing for Micro-CT Scanners.
Biomedizinische Technik 50 (2005), 1192-1193

[2] Fuchs OJ, Krause J, Kalender WA. Measurement of 3D Spatial Resolution in Multislice Spiral Computed Tomography. Physica Medica 2001; 17:129-134

深圳市展业达鸿科技有限公司
吕先生:15920060912(微信同号) 0755-22934005(座机)
地址:深圳市福田区八卦二路八卦岭工业区615栋419
邮箱:hongqi@thingstet.com
网址:www.thingstest.com

QRM GmbH Baiersdorfer Str. 22
91096 Moehrendorf Germany

V202008270L